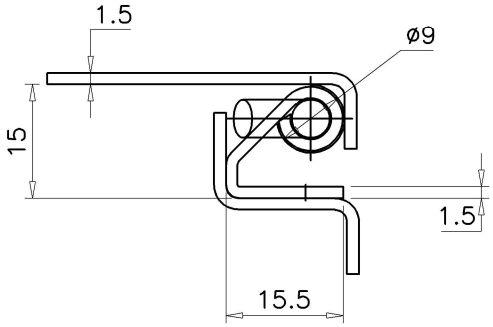


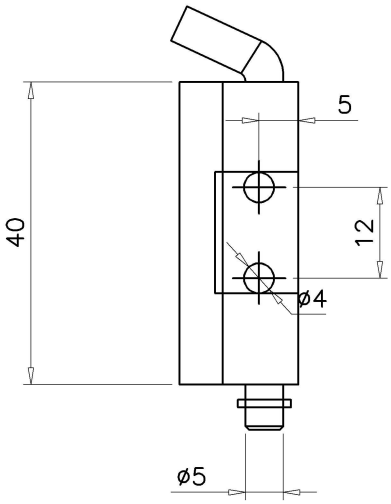

www.rsvindustriesindia.com

| | | | | |
|---|---|---|---|---|
| 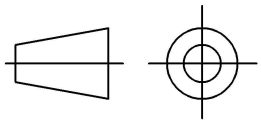 | This drawing is our Property It can't be reproduced or connunicated without our written agreement. | Material Grade :- | MS | RSV INDUSTRIES INDIA PVT LTD, PUNE |
| | | Finish :- | Yellow Zinc | |
| | | Scale :- NTS | Product Name :- | MS CONCEALED HINGE |
| | All dimensions are in "mm" | | | |
| | Drawn by :- | DATE :- | Part Name :- | MS CONCEALED HINGE 40 X 15 PATTI |
| General Tolerances | | | | |
| Upto 5 mm | Checked by :- | DATE :- | Part Number :- | RHI-90 REV |
| 5.1 mm to 60 mm | | | | |
| 60.1 mm to above | Designed by :- | DATE :- | Weight (g):- | Size:- SHEET:- |
| Angle | | | | |